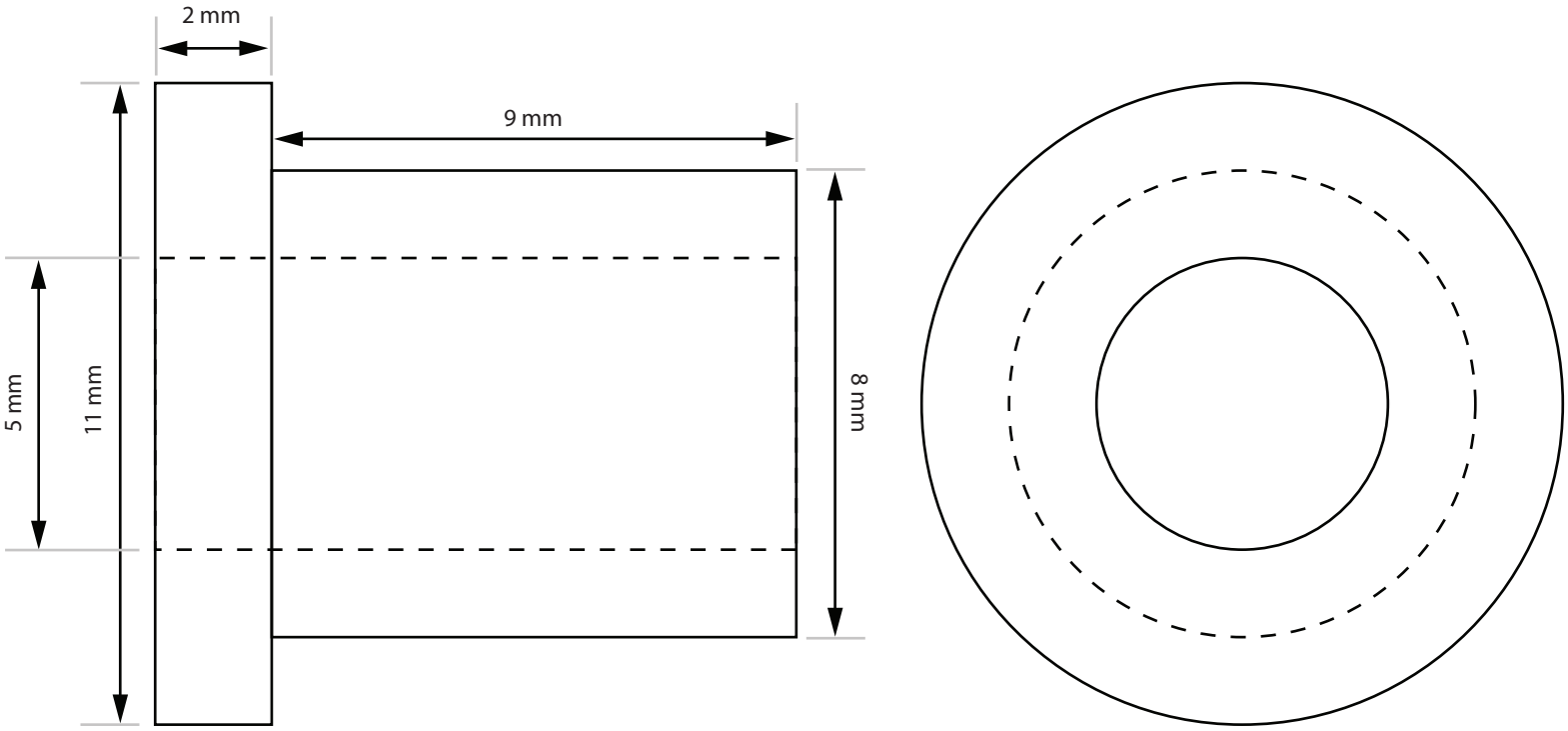
2 mm
9 mm
5 mm
11 mm
8 mm

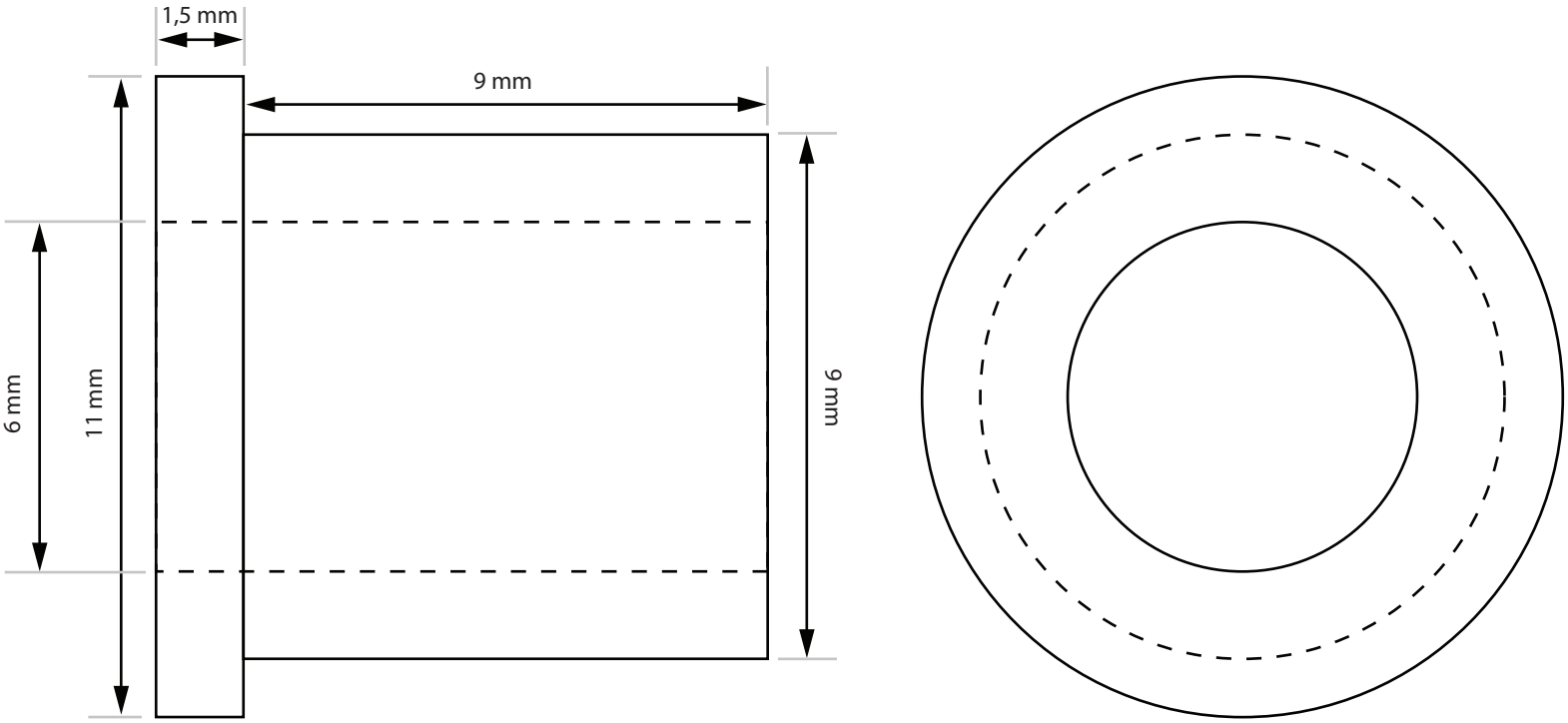
1,5 mm
9 mm
6 mm
11 mm
9 mm